UGFPG155-8

8V 155AH

Ultracell®
'Quality in Every Language'

UGFPG155-8

Awaiting Image

Physical Specification

Part Number	**UGFPG155-8**
Length	**260 ± 2 mm**
Width	**180 ± 2 mm**
Container Height	**248 ± 2 mm**
Total Height (with terminal)	**279.5 ± 2 mm**
Approx Weight Dry / Wet	**25.3 kg / 32.8 kg**

Specifications

	Nominal Voltage	8V
	Nominal Capacity (20HR)	155AH
	Nominal Capacity (5HR)	125AH
Terminal Type	Standard Terminal	M1
Container Materials	Case	Cool Gray8C-Material
	Cover	Cool Gray8C-Material
	Handle	Cool Gray8C-Material
	Plate Type	flat plate
	Electrolyte Type	Gel
Rated Capacity	20 hour rate (7.7A)	155Ah
	5 hour rate (25.0A)	125Ah
Reserve Capacity	25Amps	300min

Standard Terminal (mm) / Dimensions (mm)

M1 Terminal

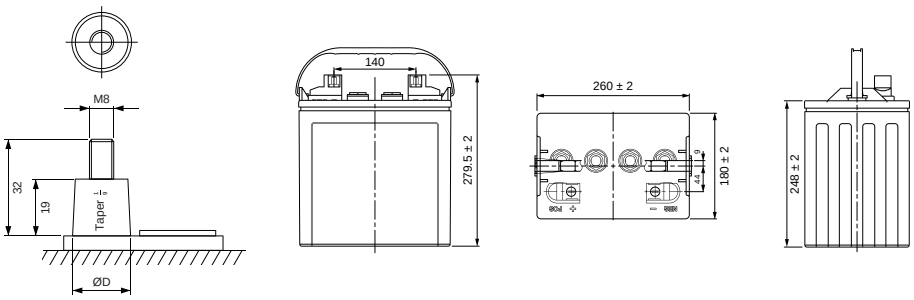

General relation of capacity vs. Storage time

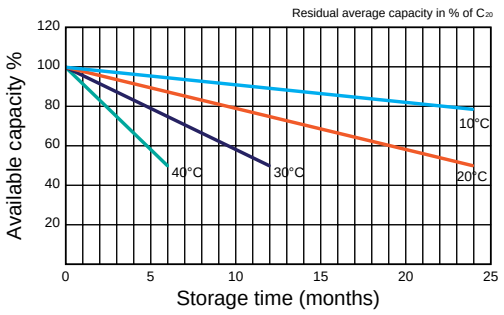

Cycle life in relation to depth of discharge

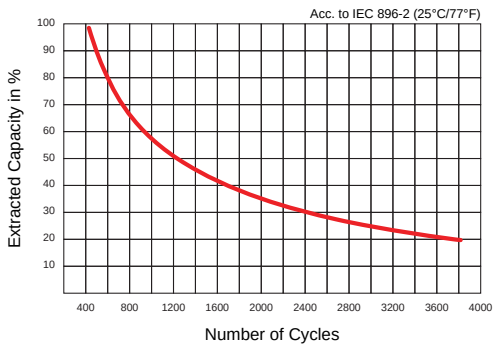

Ultracell (UK) Ltd | Vesty Business Park, Vesty Road, Liverpool, L30 1NY, United Kingdom
Tel: +44 (0) 151 523 2777 | Fax: +44 (0) 151 523 0855 | Email: info@ultracell.co.uk
www.ultracell.co.uk

Revised: 24 Jul 2014

ALL DATA IS SUBJECT TO CHANGE WITHOUT NOTICE

ISO9001